OGWSD V 4055 P3K-TSSL
Frame Light Barrier

- Buffle protection at the optics
- Metal potentiometer
- Cross bar, removable
- Air nozzle for the optics
- NO/NC switchable
- Variable operating principle: dynamic or static
- Sensitivity adjustment
- Pulse stretching adjustable
- High resolution
- Short response time

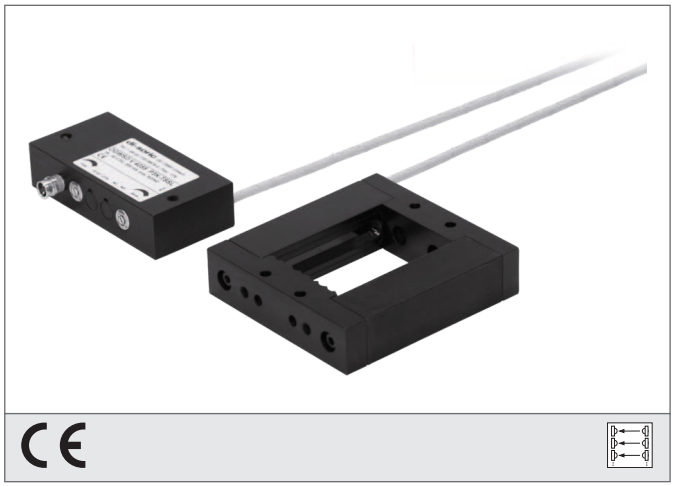

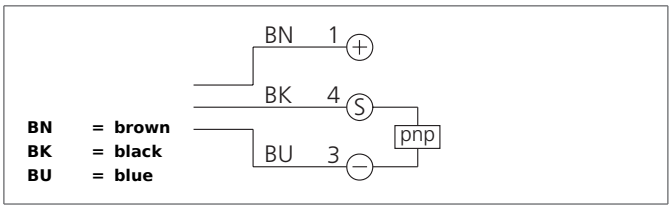

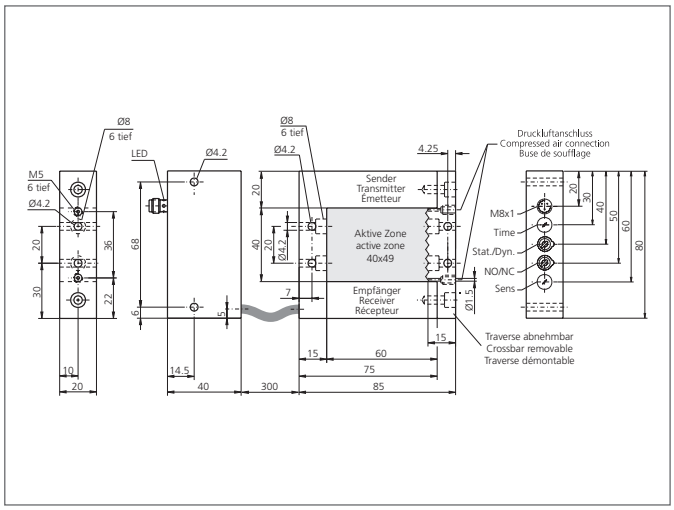

Safety instructions

The Instruments are not to be used for safety applications, in particular applications in which safety of persons depends on proper operation of the instruments.
These instruments shall exclusively be used by qualified personnel.

TECHNICAL INFORMATION (typ.)	+20°C, 24V DC
Operating principle	Dynamic/static switchable, Optical
Active zone	40 x 49 mm
Emitted light	Infrared, 880 nm, clocked
Service voltage	18 ... 35 V DC
Internal power consumption	< 30 mA
Resolution	Ø 0,7 mm (dynamic), Ø 1 mm (static)
Sensitivity adjustment	potentiometer
Switching output	pnp, 200 mA, NO/NC, switchable
Pulse stretching	0,1 ... 150 ms adjustable
Voltage drop	< 2,5 V
Response-/release time	0,1 ms / 0,1 ... 150 ms
Ambient temperature	0 ... +60 °C
Ambient light immunity	20 kLx
Insulation voltage endurance	500 V
Protection class	IP 67
Protection degree	III, operation on protective low voltage, III
Casing material	Aluminium black anodized
Connection	Connector, M8, 3-poled
Connecting cable	TK ...